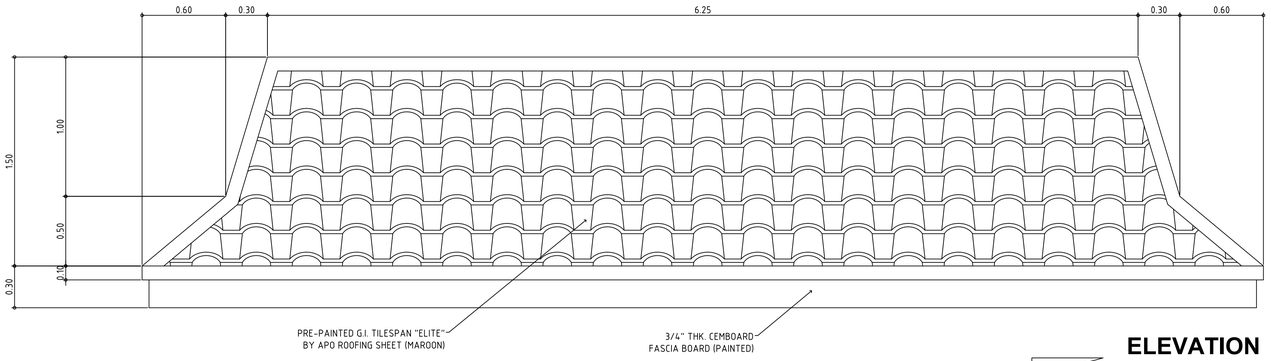

ELEVATION

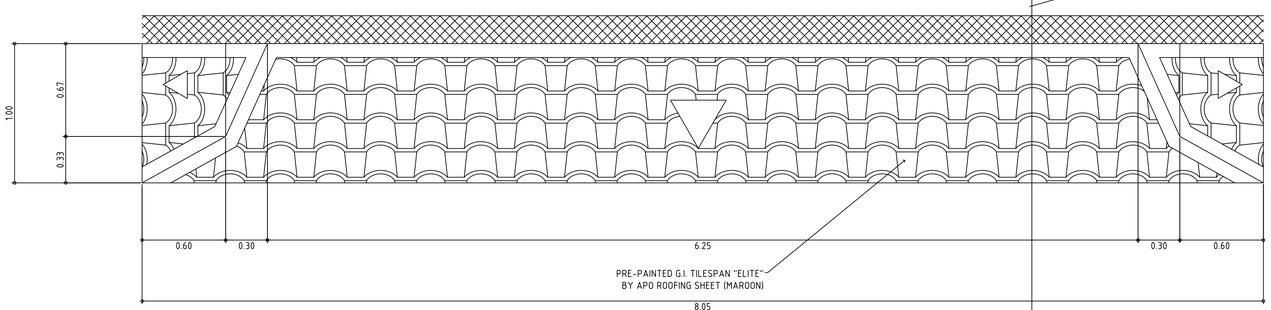

PLAN

1 / A-4

MANSARD ROOF DETAIL

SCALE 1 : 20 METERS

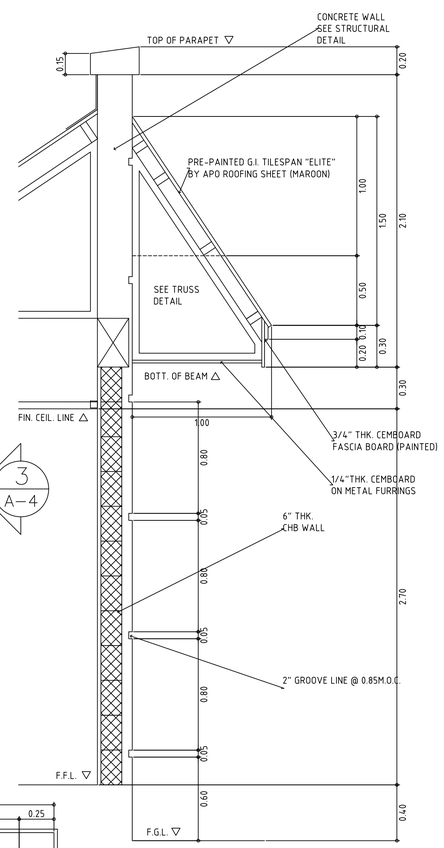

3 / A-4

BAY DETAIL-1

2 / A-4

SCALE 1 : 20 METERS

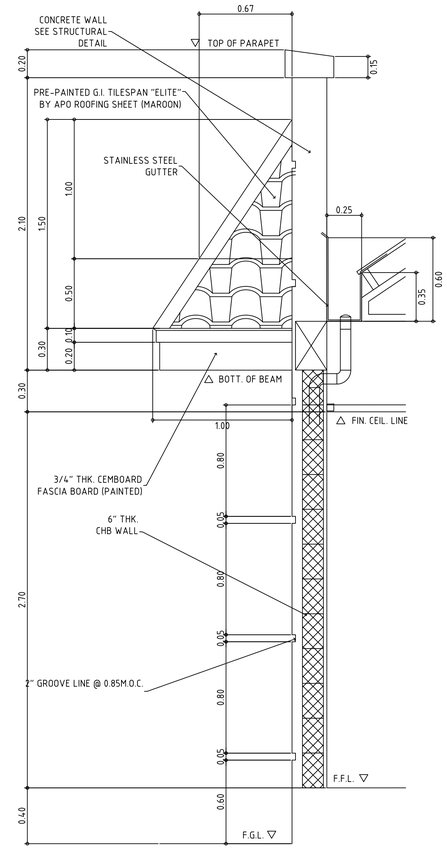

BAY DETAIL-2

3 / A-4

SCALE 1 : 20 METERS

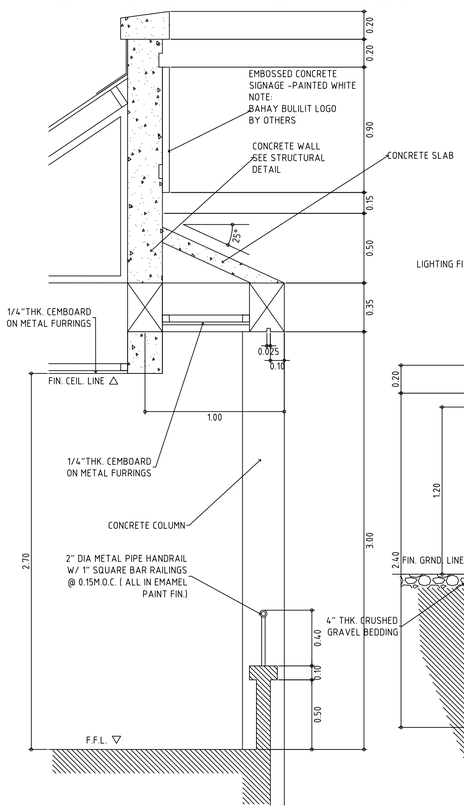

BAY DETAIL-3

4 / A-4

SCALE 1 : 20 METERS

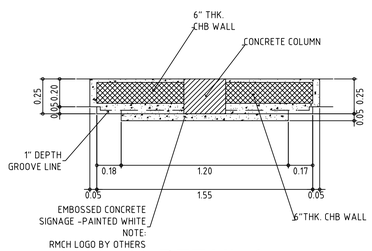

DETAIL-1

5 / A-4

SCALE 1 : 20 METERS

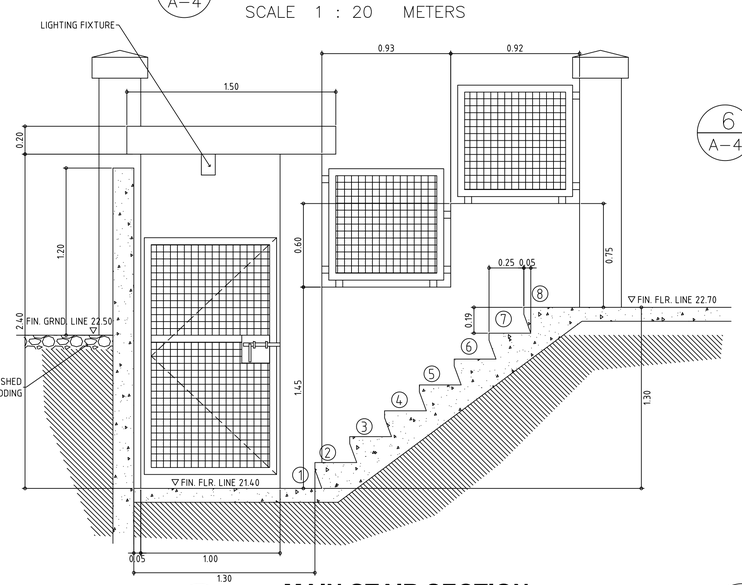

MAIN STAIR SECTION

10 / A-4

SCALE 1 : 20 METERS

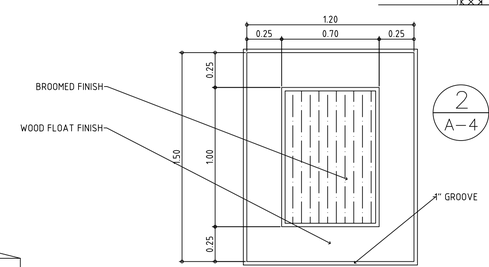

TYPICAL CAST-IN PLACE CONCRETE BLOCK

6 / A-4

SCALE 1 : 20 METERS

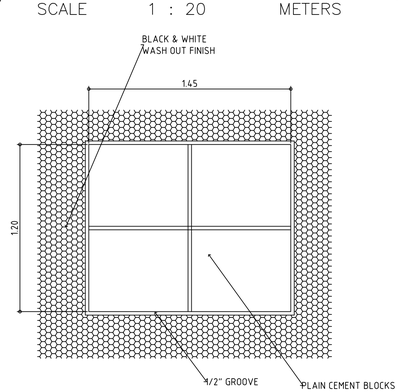

TYPICAL PLAIN CEMENT FLOOR PATTERN

7 / A-4

SCALE 1 : 20 METERS

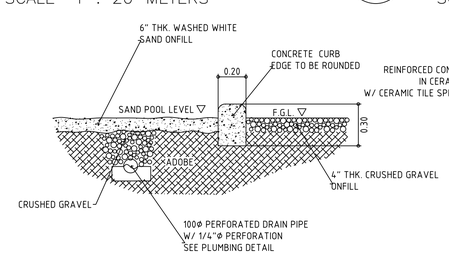

SAND POOL DETAIL

8 / A-4

SCALE 1 : 20 METERS

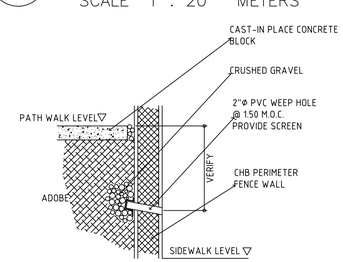

WEEP HOLE DETAIL

9 / A-4

SCALE 1 : 20 METERS

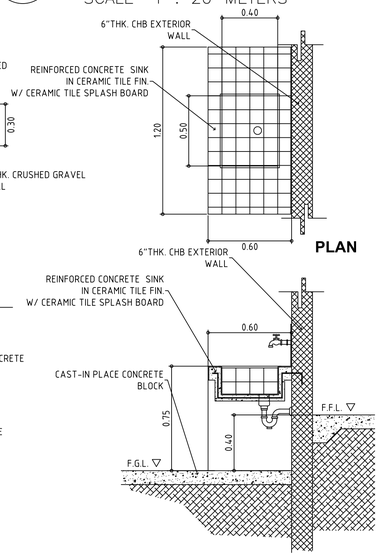

WASH AREA SINK DETAIL

10 / A-4

SCALE 1 : 20 METERS

REVISIONS			
NO.	REMARKS	DATE	

SHEET CONTENTS: DETAILS

DRAWN BY:

DATE DRAWN | CHECKED BY

DESIGNED BY

Ronald McDonald House Charities Philippines

BULILIT

Bgy. East Rembo, Makati City

OWNER: RONALD McDONALD'S HOUSE CHARITIES PHILIPPINES

ARCHITECT

ISSUED

PTR NO.

SHT. NO. A-4